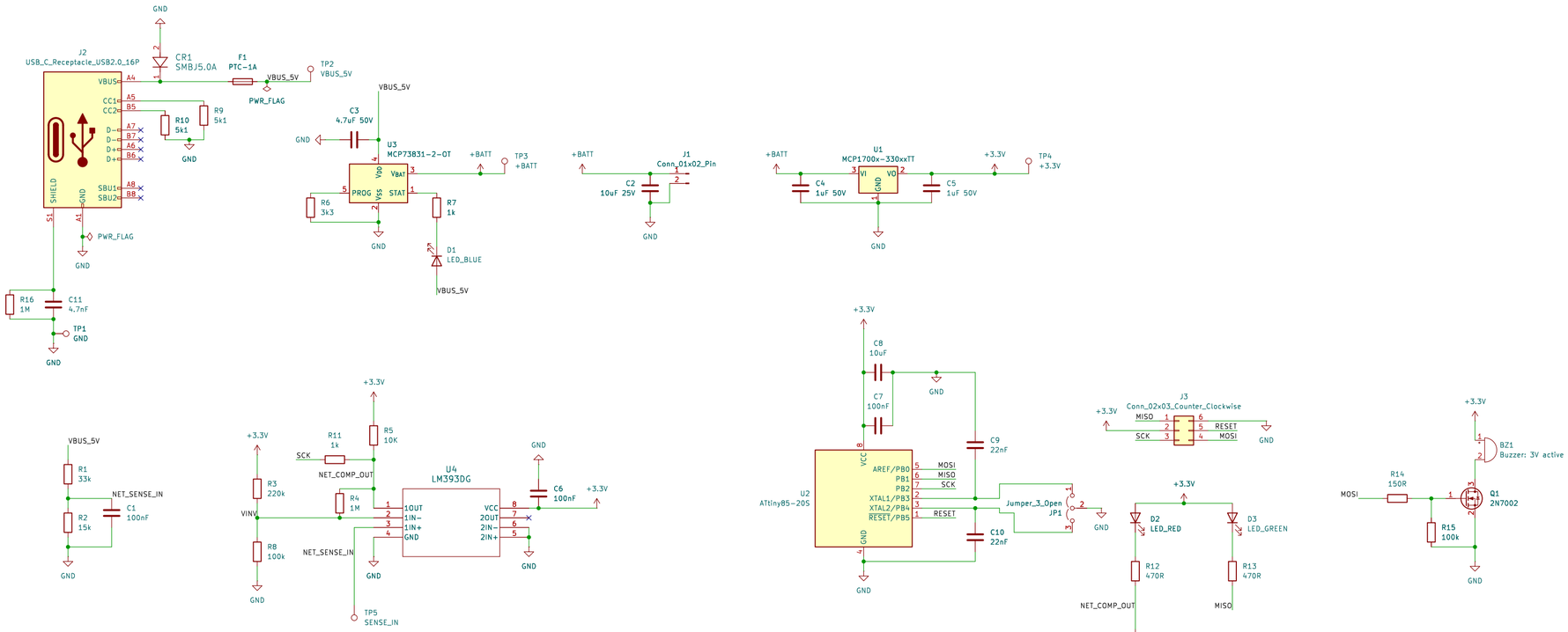
J2
USB_C_Receptacle_USB2.0_16P
VBUS
CC1
CC2
D-
D-
D+
D+
SHIELD
GND
SBU1
SBU2
A4
A5
B5
A7
B7
A6
B6
A8
B8
S1
A1
CR1
SMBJ5.0A
F1
PTC-1A
VBUS_5V
TP2
VBUS_5V
PWR_FLAG
R9
5k1
R10
5k1
GND
C3
4.7uF 50V
U3
MCP73831-2-OT
Vdd
VBAT
PROG
VSS
STAT
+BATT
TP3
+BATT
R6
3k3
R7
1k
D1
LED_BLUE
J1
Conn_01x02_Pin
C2
10uF 25V
U1
MCP1700x-330xxTT
VI
VO
GND
C4
1uF 50V
C5
1uF 50V
+3.3V
TP4
+3.3V
R16
1M
C11
4.7nF
TP1
GND
R1
33k
R2
15k
NET_SENSE_IN
C1
100nF
R3
220k
R8
100k
VINV
R11
1k
R5
10K
SCK
NET_COMP_OUT
R4
1M
U4
LM393DG
1OUT
1IN-
1IN+
GND
VCC
2OUT
2IN-
2IN+
C6
100nF
TP5
SENSE_IN
C8
10uF
C7
100nF
C9
22nF
C10
22nF
U2
ATtiny85-20S
AREF/PB0
PB1
PB2
XTAL1/PB3
XTAL2/PB4
RESET/PB5
MOSI
MISO
SCK
RESET
Jumper_3_Open
JP1
J3
Conn_02x03_Counter_Clockwise
MISO
SCK
RESET
MOSI
D2
LED_RED
D3
LED_GREEN
R12
470R
R13
470R
TP6
COMP_OUT
R14
150R
R15
100k
Q1
2N7002
BZ1
Buzzer: 3V active